www.pos-la.com
Llámenos en el D.F.: (55)9113-9883
Monterrey: (81) 8625-6870
Bajío: (442) 101-4226
del interior de la República al 01800 087 2610

Soluciones para la industria de la hospitalidad

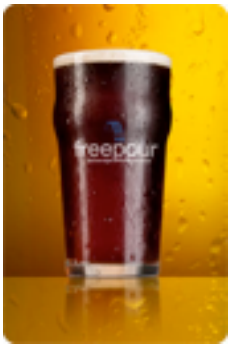

El dispensador de cerveza de barril le da un control más allá de lo imaginable.

- Reportes de variantes con marcas de tiempo *(time stamp)*
- Monitoreo en tiempo real de lo usado y lo vendido
- Se conecta con su sistema punto-de-venta existente
- Niveles de tolerancia con código de color
- Transparente para sus invitados
- Archive los datos en tiempo real, al final del día, por semana y rango de fecha personalizado
- Alertas por correo electrónico de acuerdo a niveles de tolerancia alcanzados y temperaturas de enfriamiento
- Diagnósticos y pruebas de sellado en pantalla táctil
- Generación de reportes programados o al momento
- Garantía de por vida en los sensores de flujo

Para más información visite
www.pos-la.com.mx/freepour.php

Flujo de trabajo del dispensador de cerveza DraftChecker

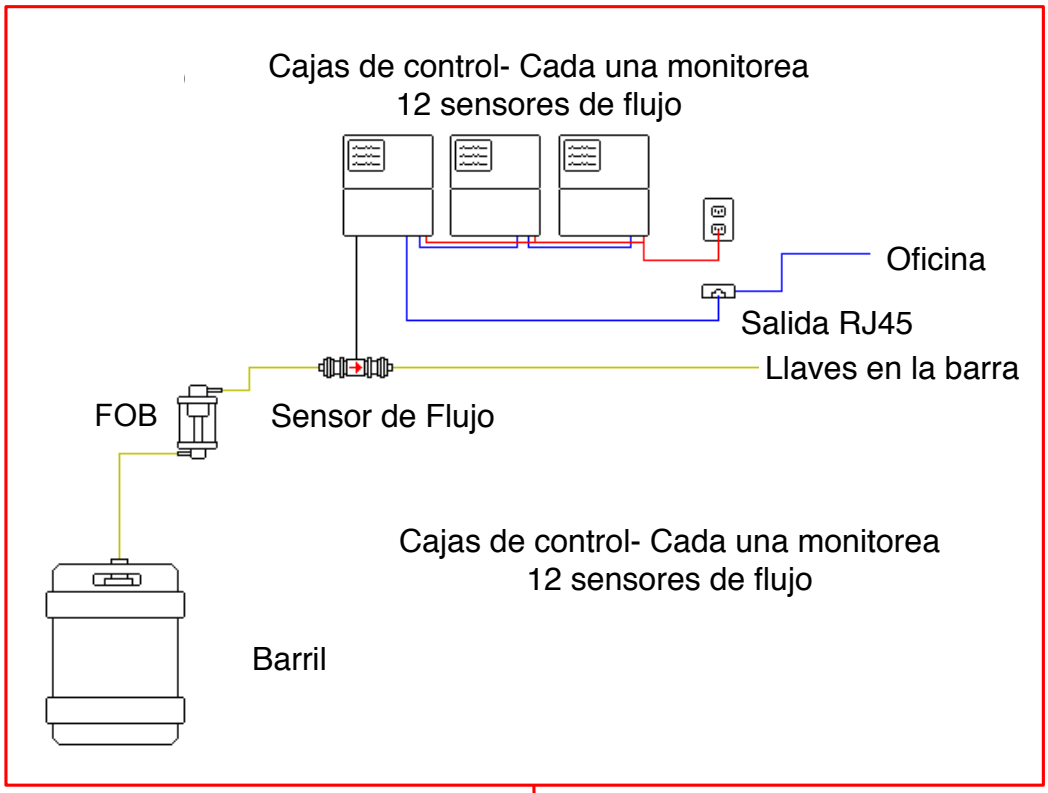

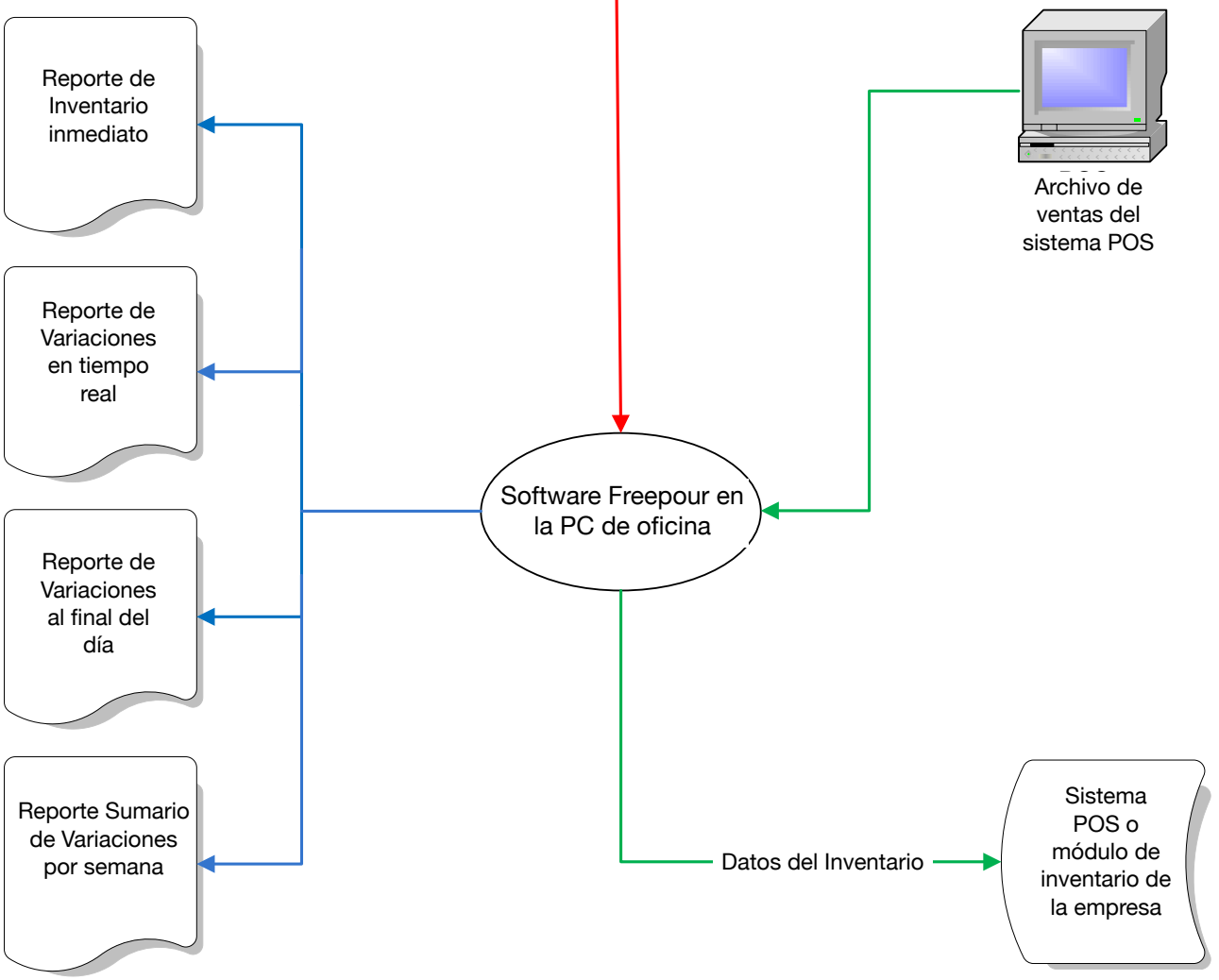

www.pos-la.com
Llámenos en el D.F.: (55)9113-9883
Monterrey: (81) 8625-6870
Bajío: (442) 101-4226
del interior de la República al 01800 087 2610

Soluciones para la industria de la hospitalidad

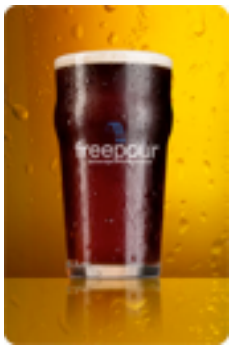

Capturas de Pantalla

Reporte de variaciones al final del día

freepour controls inc.

Variance End Day Report

Printed Date: 9/26/2012 8:00:01AM

Restaurant: Demo Restaurant
Stocking Locations: MAIN

Start Date: 9/25/2012 11:00:00AM
End Date: 9/26/2012 8:00:00AM

	Used(Oz)	Sold(Oz)	Promo/ Spill (Oz)	Variance (Oz)	Tolerance (Oz)	Over/Short (Oz)	Over/Short %	Over/Short $	Used Cost $	Sold Revenue $	Pour Cost %
DRAUGHT											
DOMESTIC											
OKANAGAN SPRIN	88.69	84.00	0.00	-4.69	0.00	-4.69	-5.59%	$-1.98	$9.58	$37.16	25.77%
	88.69	**84.00**	**0.00**	**-4.69**	**0.00**	**-4.69**	**-5.59%**	**$-1.98**	**$9.58**	**$37.16**	**25.77%**
IMPORT											
HOEGAARDEN	42.76	36.00	0.00	-6.76	0.00	-6.76	-18.78%	$-3.94	$6.26	$20.97	29.83%
SOPORRO	694.61	502.00	0.00	-192.61	0.00	-192.61	-38.37%	$-70.96	$76.87	$185.43	41.46%
STELLA ARTOIS	174.00	140.00	0.00	-34.01	0.00	-34.01	-24.29%	$-16.98	$25.97	$69.90	37.15%
	911.38	**678.00**	**0.00**	**-233.38**	**0.00**	**-233.38**	**-34.42%**	**$-91.88**	**$109.09**	**$276.30**	**39.48%**
PREMIUM											
KEITHS	137.75	126.00	0.00	-11.75	0.00	-11.75	-9.33%	$-4.61	$14.95	$52.92	28.25%
STEAM WHISTLE	319.29	374.00	0.00	54.71	0.00	54.71	14.63%	$19.65	$33.87	$134.80	25.13%
	457.04	**500.00**	**0.00**	**42.96**	**0.00**	**42.96**	**8.59%**	**$15.03**	**$48.82**	**$187.72**	**26.01%**

Summary - DRAUGHT

Total Sold (Oz):	1,262.00	Total Over/Short (Oz):	-195.11	Total Revenue ($):	$501.18
Promo/Spill (Oz):	0.00	Total Over/Short Cost ($) :	$-23.36	Total Cost ($):	$167.49
Total Used (Oz):	1,457.11	Total Retail Over/Short ($):	$-78.83	Total Pour Cost (%) :	33.42%
Total Variance (Oz):	-195.11	Temperature:	2°C		
Total Variance (%):	-15.46%				

Sign-Off Section

Bartender: _____ Manager: _____

Comments: _____

Soluciones para la industria de la hospitalidad

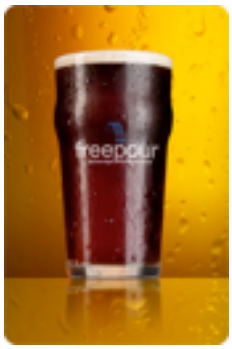

Capturas de Pantalla

Reporte detallado por turno

Shift Detailed Report - Demo Restaurant - MAIN - 9/25/2012

	Date	Time	Sold Oz	Used Oz	Variance Oz	Variance %	Overall Variance %	Overall Variance Oz	Overall Sold Oz	Overall Used Oz
	09/25/2012	08:00AM-10:59AM	0.00	0.00	0.00	0.00%	0.00%	0.00	0.00	0.00
+	09/25/2012	11:00AM-04:59PM	212.00	199.62	12.38	5.84%	5.84%	12.38	212.00	199.62
-	09/25/2012	05:00PM-01:59AM	1050.00	1257.50	-207.49	-19.76%	-15.46%	-195.11	1262.00	1457.12

Brand	Sold Oz	Used Oz	Variance Oz	Variance %
SOPORRO	392.00	597.41	-205.41	-52.40%
KEITHS	112.00	124.37	-12.37	-11.04%
STEAM WHISTLE PILSNER	356.00	305.62	50.38	14.15%
OKANAGAN SPRING PALE ALE	28.00	31.28	-3.28	-11.72%
STELLA ARTOIS	126.00	156.07	-30.07	-23.86%
HOEGAARDEN	36.00	42.75	-6.75	-18.75%

	09/26/2012	02:00AM-07:59AM	0.00	0.00	0.00	0.00%	-15.46%	-195.11	1262.00	1457.12

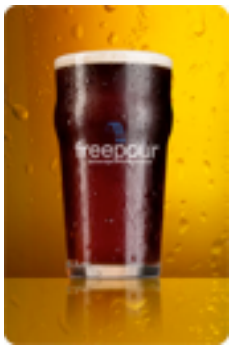

Capturas de Pantalla

Reporte detallado por turno II

Hourly Detailed Report - Demo Restaurant - MAIN - 9/25/2012

	Date	Time	Sold Oz	Used Oz	Variance Oz	Variance %	Overall Variance %	Overall Variance Oz	Overall Sold Oz	Overall Used Oz
+	09/25/2012	04:00PM-04:59PM	14.00	0.00	14.00	100.00%	5.84%	12.38	212.00	199.62
-	09/25/2012	05:00PM-05:59PM	232.00	451.39	-219.39	-94.57%	-46.62%	-207.01	444.00	651.01

Brand	Sold Oz	Used Oz	Variance Oz	Variance %
SOPORRO	140.00	358.01	-218.01	-155.72%
KEITHS	14.00	15.46	-1.46	-10.40%
STEAM WHISTLE PILSNER	50.00	46.21	3.79	7.58%
OKANAGAN SPRING PALE ALE	14.00	14.89	-0.89	-6.36%
STELLA ARTOIS	14.00	16.82	-2.82	-20.15%

+	09/25/2012	06:00PM-06:59PM	240.00	222.66	17.34	7.22%	-27.73%	-189.67	684.00	873.67
+	09/25/2012	07:00PM-07:59PM	228.00	228.77	-0.77	-0.34%	-20.88%	-190.44	912.00	1102.45
+	09/25/2012	08:00PM-08:59PM	182.00	193.59	-11.59	-6.37%	-18.47%	-202.03	1094.00	1296.04

www.pos-la.com
Llámenos en el D.F.: (55)9113-9883
Monterrey: (81) 8625-6870
Bajío: (442) 101-4226
del interior de la República al 01800 087 2610

Soluciones para la industria de la hospitalidad

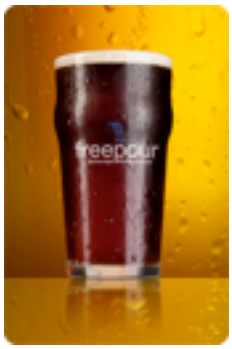

Capturas de Pantalla

Reporte detallado por turno III

Five Minute Detailed Report - Demo Restaurant - MAIN - 9/25/2012

	Date	Time	Sold Oz	Used Oz	Variance Oz	Variance %	Overall Variance %	Overall Variance Oz	Overall Sold Oz	Overall Used Oz
-	09/25/2012	05:15PM-05:19PM	42.00	189.91	-147.91	-352.16%	-49.07%	-147.22	300.00	447.21

	Brand	Sold Oz	Used Oz	Variance Oz	Variance %
-	SOPORRO	42.00	189.91	-147.91	-352.16%

Time	PLU	Sold	Description	Check #	Order Dept.	Table Name	Server Name
5:15 PM	752513	1	HH SAPPORO	30019	3		10099
5:15 PM	752513	1	HH SAPPORO	30019	3		10099
5:18 PM	752513	1	HH SAPPORO	10022	1		10238

+	09/25/2012	05:20PM-05:24PM	0.00	38.38	-38.38	-100.00%	-61.86%	-185.59	300.00	485.59
+	09/25/2012	05:25PM-05:29PM	14.00	15.61	-1.61	-11.49%	-59.62%	-187.20	314.00	501.20
	09/25/2012	05:30PM-05:34PM	0.00	0.00	0.00	0.00%	-59.62%	-187.20	314.00	501.20
		05:35PM-								

www.pos-la.com
Llámenos en el D.F.: (55)9113-9883
Monterrey: (81) 8625-6870
Bajío: (442) 101-4226
del interior de la República al 01800 087 2610

Soluciones para la industria de la hospitalidad

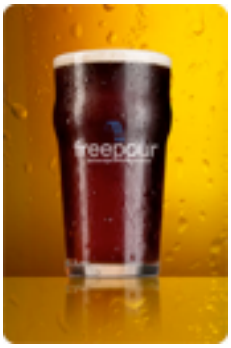

La báscula digital ScanChecker le da el control sobre el licor, vino y botellas que usted siempre buscó.

- ScanChecker incorpora un escáner de códigos de barras en 3D inteligente que almacena su inventario de licor, vino y bebidas embotelladas
- Le permite escanear y pesar hasta 10 botellas por minuto con una precisión del 100%, es decir, 100 botellas le tomará apenas 10 minutos para inventariar
- El software hace interfaz con los datos de su sistema POS (como Aloha), lo que le genera una gran variedad de reportes por marca
- Flexibilidad, un sistema maneja múltiples áreas del bar. Usted podrá inventariar cada botella o usar el módulo SpotChecker para monitorear sus 10 bebidas más vendidas diariamente

Para más información visite
www.pos-la.com.mx/freepour.php

Flujo de trabajo de Freepour ScanChecker

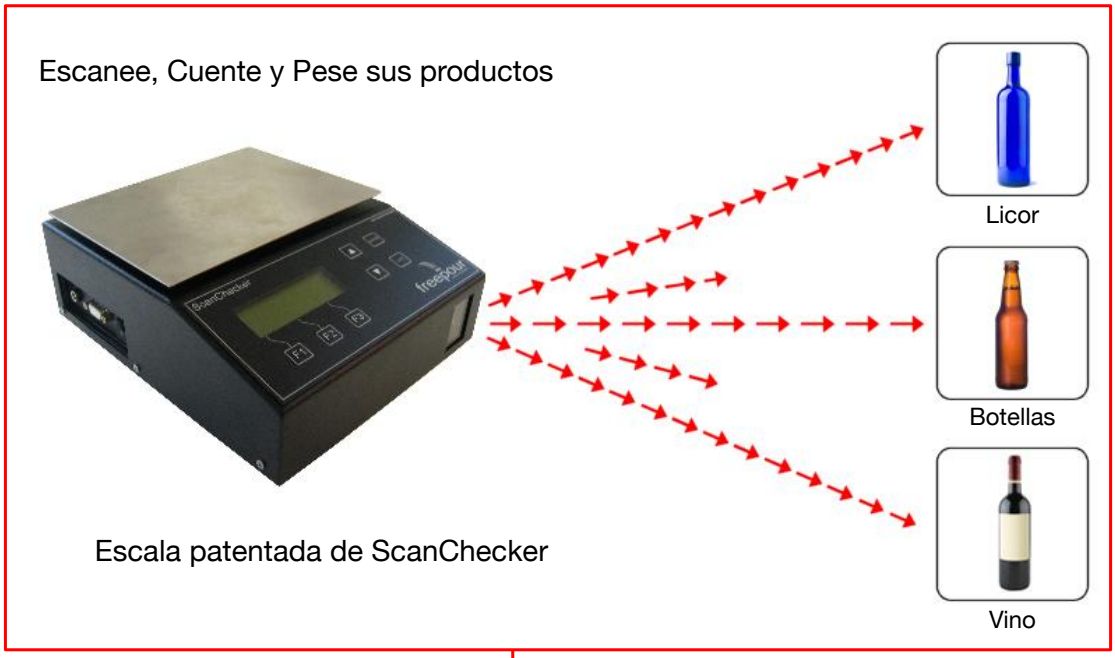

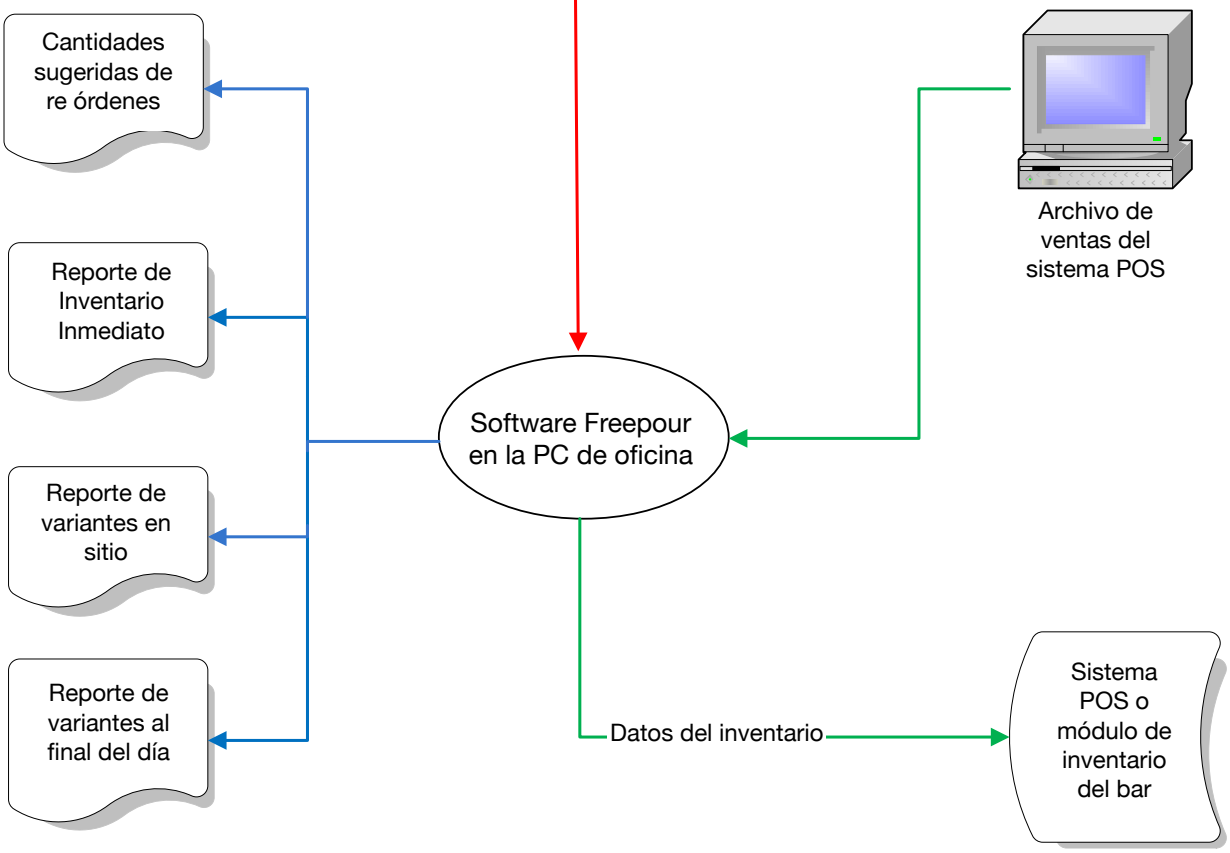

www.pos-la.com
Llámenos en el D.F.: (55)9113-9883
Monterrey: (81) 8625-6870
Bajío: (442) 101-4226
del interior de la República al 01800 087 2610

Soluciones para la industria de la hospitalidad

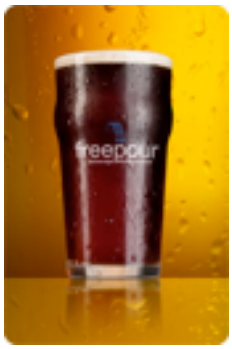

Capturas de Pantalla

Reportes de Variaciones por Categoría

freepour Beverage Management

Variance Category Report — Printed Date: Apr 28,2011, 02:37 PM

DEMO — Start Date: Apr 25,2011, 08:00 AM End Date: Apr 26,2011, 08:00 AM

STOCKING LOCATION: MAIN

Brand Information	Variance Information					Over / Short Information				Sales Information		
Category & Sub-Category	Used	Sold	Promo / Spill	Variance	Variance %	Allowed Tolerance	Variance O/S	% O/S	Retail O/S	Used Cost	Sold Revenue	Pour Cost %
BOTTLES												
BEER	16.00	18.00	0.00	2.00	11.11%	0.00	2.00	11.11%	$8.68	$23.76	$78.12	30.41%
COOLERS	3.00	4.00	0.00	1.00	25.00%	0.00	1.00	25.00%	$6.61	$6.00	$26.44	22.69%
Total	19.00	22.00	0.00	3.00	13.64%	0.00	3.00	13.64%	$15.29	$29.76	$104.56	28.46%
LIQUOR												
APERITIF	27.86	27.00	0.00	0.87	3.22%	0.36	-0.50	-1.86%	-$3.76	$18.63	$162.39	11.47%
BOURBON	49.79	41.50	0.00	-8.29	-19.98%	0.83	-8.[illegible]		-$42.77	$53.42	$180.94	29.52%
LIQUEUR	22.54	19.00	0.00	-3.54	-18.63%	0.38	[illegible]		-$18.47	$23.91	$115.25	20.75%
RUM	3.73	3.00	0.00	-0.73	-24.33%	0.0[illegible]	-0[illegible]		-$3.37	$3.68	$15.12	24.31%
RYE	27.60	18.00	0.00	-9.60	-53.33%	0.36	-9[illegible]		-$48.60	$29.73	$36.54	81.37%
SCOTCH	9.89	8.00	0.00	-1.89	-23.63%	0.06	-1.83	-22.90%	-$10.67	$15.61	$49.36	31.63%
TEQUILA	4.95	4.00	0.00	-0.95	-23.75%	0.08	-0.[illegible]	-21.75%	-$5.27	$5.82	$26.96	21.61%
VODKA	45.61	38.00	0.00	-7.61	-20.03%	0.76	-[illegible]	-18.03%	-$36.03	$52.49	$73.08	71.82%
Total	191.97	158.50	0.00	-31.74	-20.03%	2.89	[illegible]54	-19.90%	-$168.94	$203.29	$659.64	30.82%
WINE												
RED	16.71	12.49	0.00	-4.22	-33.79%	0.12	-4.10	-32.83%	-$4.40	$5.56	$13.40	41.49%
WHITE	30.00	24.49	0.00	-5.51	-22.50%	0.25	-5.26	-21.48%	-$5.20	$5.67	$24.23	23.40%
Total	46.71	36.98	0.00	-9.73	-26.31%	0.37	-9.36	-25.31%	-9.60	11.23	37.63	29.84%

Reports on:
Beer
Liquor
Wine

freepour Beverage Management DEMO

Variance Report — Printed Date: Apr 28,2011, 02:37 PM

Start Date: Apr 25,2011, 08:00 AM End Date: Apr 26,2011, 08:00 AM

STOCKING LOCATION: MAIN

Brand Information	Used vs Sold Variance Information				Over / Short Information				Sales Information		
Brand Name	Used	Sold	Promo / Spill	Variance	Allowed Tolerance	Variance O/S	% O/S	Retail O/S	Used Cost	Sold Revenue	Pour Cost %
LIQUEUR											
AMARETTO	8.29	7.00	0.00	-1.29	0.14	-1.15	-16.43%	-$6.05	$9.02	$36.54	24.70%
BAILEYS IRISH CREAM	4.39	4.00	0.00	-0.39	0.08	-0.31	-7.75%	-$1.80	$4.90	$23.32	20.99%
GOLDSCHLAGER	1.93	0.00	0.00	-1.93	0.00	-1.93	-100.00%	-$10.15	$2.06	$26.24	7.87%
JAGERMEISTER	7.93	8.00	0.00	0.07	0.16	-0.09	-1.13%	-$0.47	$7.93	$29.15	27.19%
SUB-TOTAL	22.54	19.00	0.00	-3.54	0.38	-3.48	-18.32%	-$18.47	$23.91	$115.25	20.75%
BOURBON											
JACK DANIELS	19.32	14.50	0.00	-4.82	0.29	-4.53	-31.24%	-$23.83	$21.58	$36.54	59.06%
SUB-TOTAL	49.79	41.50	0.00	-8.29	0.83	-8.10	-19.52%	[illegible]	3.42	$180.94	29.52%
RYE											
CROWN ROYAL	27.60	18.00	0.00	-9.60	0.36	-9.24	-51.33%	-$48.60	$29.73	$36.54	81.37%
SUB-TOTAL	27.60	18.00	0.00	-9.60	0.36	-9.24	-51.33%	-$48.60	$29.73	$36.54	81.37%
VODKA											
GREY GOOSE	9.21	7.00	0.00	-2.21	0.14	-2.07	-29.57%	-$10.89	$16.72	$36.54	45.76%
ABSOLUT	36.40	31.00	0.00	-5.40	[illegible]	[illegible]	-15.42%	-$25.14	$35.77	$36.54	97.88%
SUB-TOTAL	45.61	38.00	0.00	-7.61	[illegible]	[illegible]	-18.03%	-$36.03	$52.49	$73.08	71.82%

Unrecorded Sale

1.5 oz Pours for Better Tips

Almost $2 per oz Loss at Cost.